5011202401

DELTA ELECTRONICS, INC.

VFD-A / B / F / H / L / M / P / S SERIES
數位操作器延長線組及組立圖
KEYPAD EXTENSION CABLE & ASSEMBLY FIGURE

UNIT : mm [inch]

2.VFD-A / B / F / H / M / P SERIES
延長線組 EXTENSION CABLE

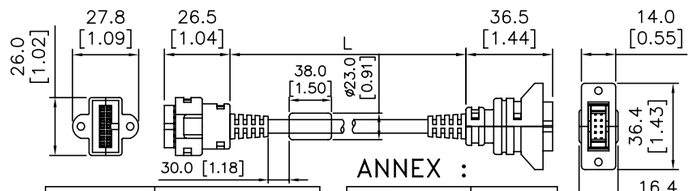

TYPE	L
EG0610A	600 [23.6]
EG1010A	1000 [39.4]
EG2010A	2000 [78.7]
EG3010A	3000 [118.1]
EG5010A	5000 [196.8]

ANNEX :

CLIP	2pcs
SCREW	
M2.0 NUT	4pcs
M3.0*L6	2pcs
M4.0*L8	2pcs
ø3.0*L8	4pcs

*. VFD-M SERIES
(LC-M02E)

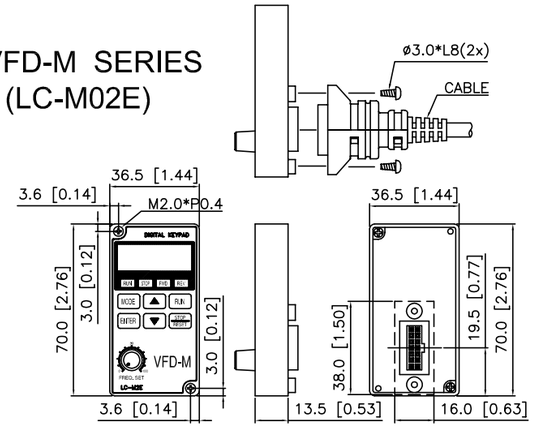

(1). 夾片嵌入式
CLIPPED TYPE

(2).折邊嵌入式
FOLDING INSERTED TYPE

(3).壁掛式
HANGED TYPE

*. VFD-A / H SERIES
0.75KW~3.7KW
(LC-A05E)

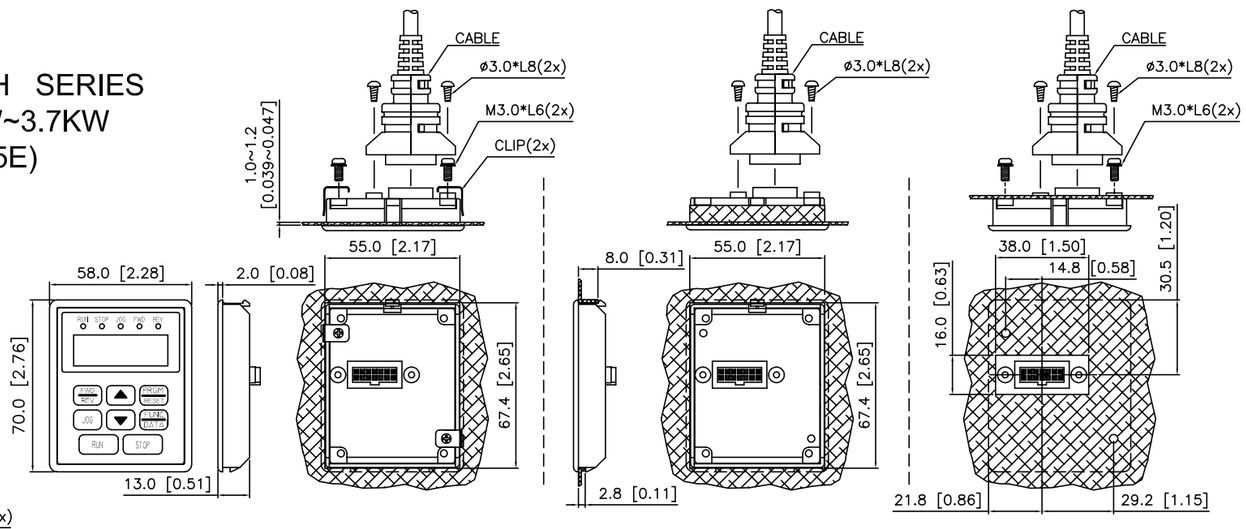

1.VFD-B / F / H / L / M / P / S SERIES
VFD-PU02X
延長線組 EXTENSION CABLE

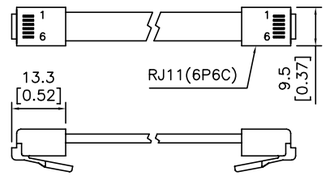

TYPE	L
RJ-01	1000 [39.37]
RJ-02	2000 [78.74]
RJ-03	3000 [118.11]
RJ-04	4000 [157.48]
RJ-05	5000 [196.85]

*. VFD-A / H / P SERIES
5.5KW~22KW
(LC-A10E, VFD-PU04)

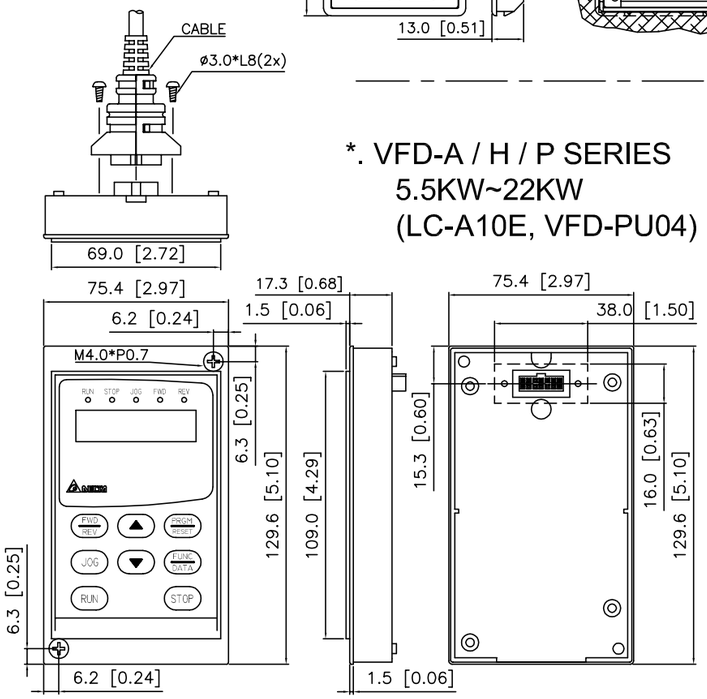

*. VFD-B / F SERIES
(VFD-PU01)

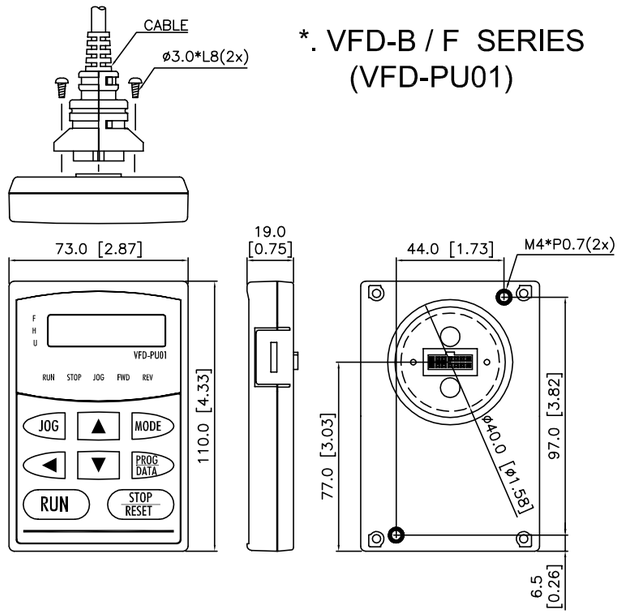
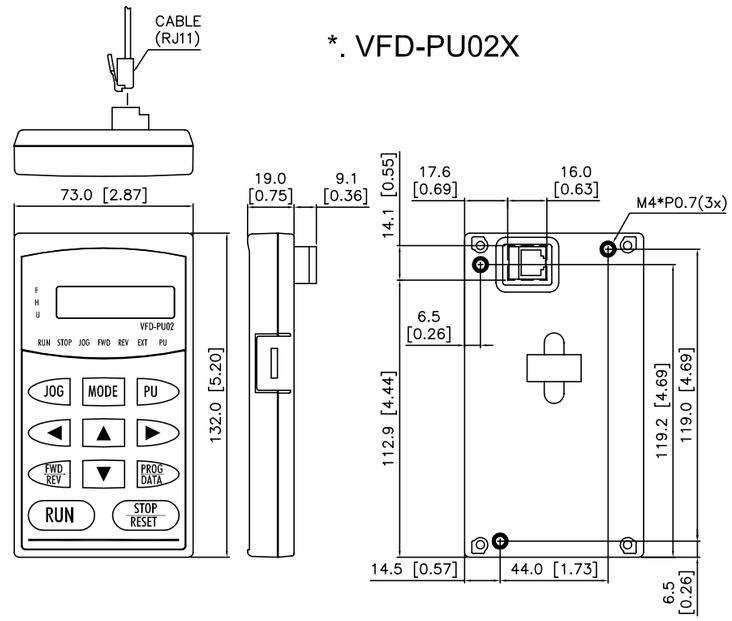
*. VFD-PU02X